School of Electrical & Computer Engineering
Aristotle University of Thessaloniki

An EEG pre-processing technique for the fast recognition of motor imagery movements

Gregory Kalogiannis (1); George Kapsimanis (2); George Hassapis (3)
Aristotle University of Thessaloniki, School of Electrical and Computer Engineering, Thessaloniki 54124, Greece
1. gkalogiannis@ece.auth.gr, 2. kapsimag@ece.auth.gr, 3. chasapis@eng.auth.gr

Introduction

Continuous Passive Motion (CPM) Machines

- used for rehabilitation in hospitals
- important supplement to medical and therapeutic treatment

Goals of rehabilitation

- Control post-operative pain
- Reduce: Inflammation; Joint stiffness; Swelling
- protect the healing repair or tissue
- restore the range of motion

Mode of operation

- move injured joint
  - over a range of motion
  - in a circular periodical way

Devices features

- periodically increment the maximum angle of fist or elbow rotation in each cycle
- program the unit for step angle changes according to patient rahabiltation needs
- store the programmed therapy parameters into local media.

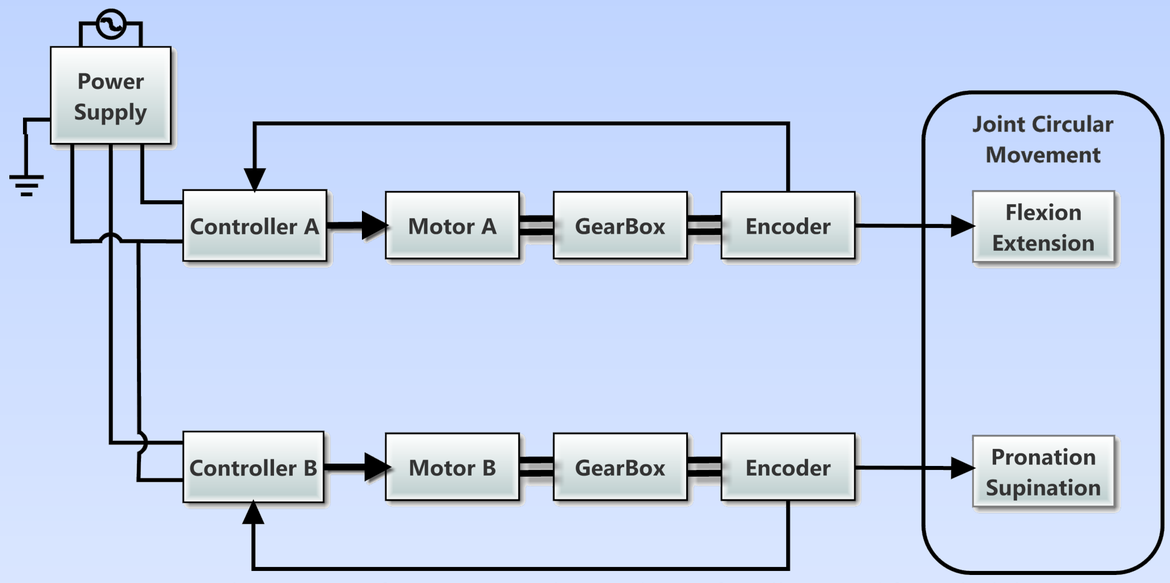

A typical structure of a commercial CPM device for elbow and fist rehabilitation

A required improvement of these CPM devices would be to **automatically create movement trajectories** determined by processing the **generated by the patient brain signals** in order to **extract the patient's intensions and will**.

The realization of such an improvement requires the **fast recognition of the intended motor imagery movements** of the patient in order to **create the appropriate control signals.**

A new processing technique of EEG signals is proposed for the fast recognition of motor imagery movement by identifying the occurrence of event related desynchronization and synchronization (ERS/ERD) phenomena. The recognition takes place within the time limits imposed by the control requirements of continuous passive devices.

Pre-processing EEG Data

During imagery motor movement tasks, the so called mu and beta event-related desynchronization (ERD) and synchronization (ERS) are taking place.

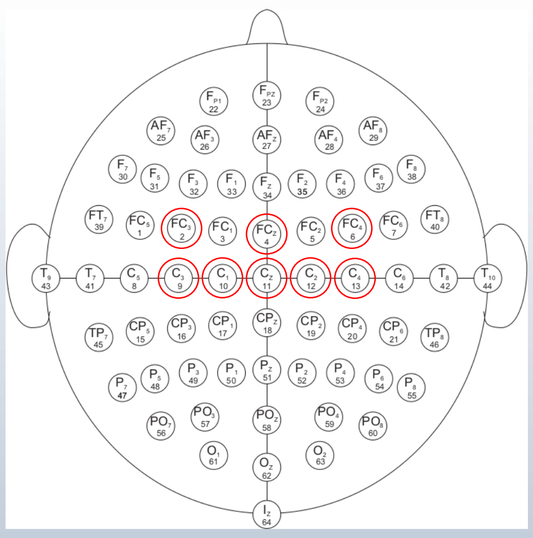

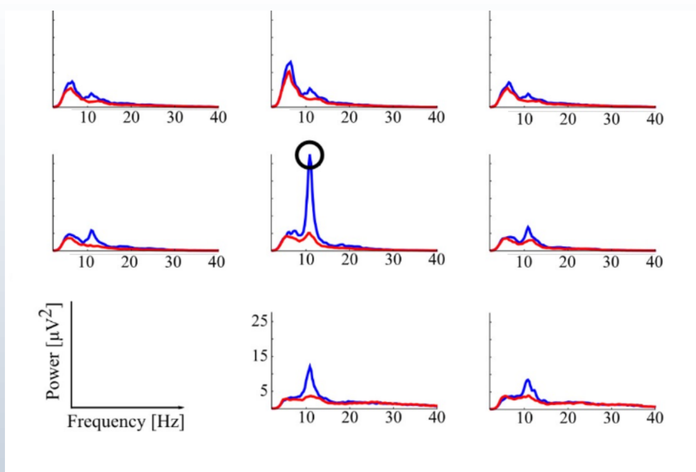

Power Spectrum of signals received from electrodes FC3, FCZ, FC4, C3, C1, CZ, C2 and C4

Spikes and suppression appearing simultaneously in different electrode signals, indicate the existence of ERD/ERS phenomena. To determine the existence of these simultaneous spikes attributed to the ERD/ERS event, the convolution of the observed signals is computed

PRE-PROCESSING DATA TECHNIQUE FOR EXTRACTING FEATURES THAT IDENTIFY ERD/ERS EVENTS

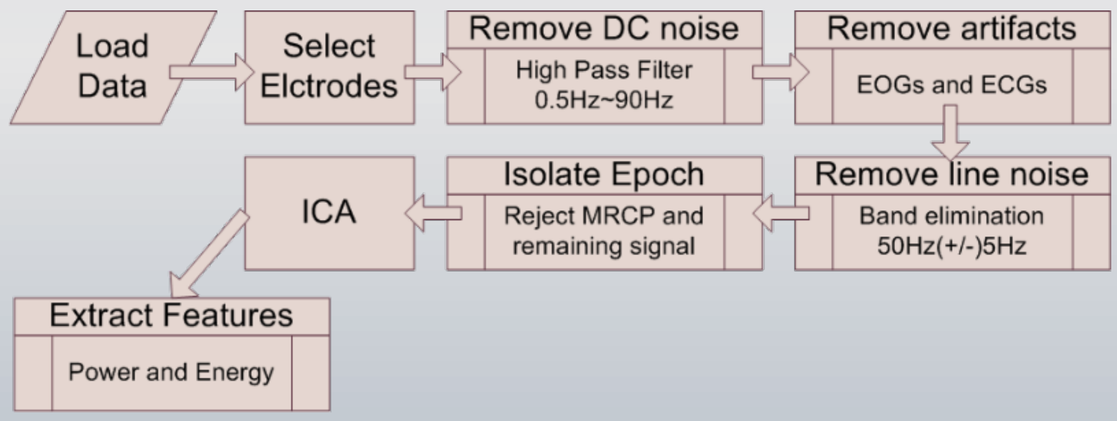

The proposed procedure for recognizing motor imaginary movements is as follows:

1. **Classify offline data signals (**obtained from PhysioNet) to classes of Left/Right movements on the basis of Power and Energy features of ERD/ERS extracted by applying the above data processing technique.
2. **Extract same features from online signals with the same processing technique.**
3. **Find what features** of the offline data classification **coincide** with the extracted features of the online signals.

Offline Data Classification

1	Extract Features of Power and Energy using the proposed technique
2	Classify the above features to classes by using SVM supervised learning model

Online Signal Classification

1	Select a random dataset (PhysioNet) without the event file information	3	Check to what offline class the feature of the online signal belong
2	Extract features with the proposed processing algorithm	4	Verify whether the correct class of the online signal is found by using the event file information

Experimental Results for Fist Movements

Electrode	Classification Group			
	Left/Right, s	Wrong Samples, %	ERD/ERS, s	Wrong Samples, %
FC_3	0.124288	12	0.124459	11
FC_z	0.125329	14	0.126518	13
FC_4	0.128660	7	0.141144	5
C_3	0.128067	8	0.129101	5
C_1	0.126894	7	0.127608	7
C_z	0.125279	4	0.125609	8
C_2	0.127079	7	0.127313	12
C_4	0.127945	9	0.130748	4

Using the pre- proposed processing technique

Electrode	Classification Group			
	Left/Right, s	Wrong Samples, %	ERD/ERS, s	Wrong Samples, %
FC_3	5.634785	11	4.992374	11
FC_z	4.237469	12	4.178548	14
FC_4	4.640433	7	5.098300	5
C_3	3.496284	9	3.994853	7
C_1	4.195463	7	5.098300	5
C_z	6.004934	4	6.963625	7
C_2	5.468561	7	5.911480	13
C_4	5.367894	10	5.732189	5

Without the use of the proposed pre-processing technique

Computation time for the classification of the online signal, using the proposed processing technique, is at least the ¼ of the computation time for the signal classification when the proposed technique is not used.

Author contact details